THIS DOCUMENT CONTAINS INFORMATION PROPRIETARY TO GENESIS FILTRATION CORPORATION. ANY REPRODUCTION, DISCLOSURE, OR USE OF THIS DOCUMENT IN WHOLE OR IN PART IS EXPRESSLY PROHIBITED EXCEPT AS GENESIS FILTRATION CORPORATION MAY OTHERWISE AGREE TO IN WRITING.

REVISIONS			
LTR	DESCRIPTION	DATE	APPROVED

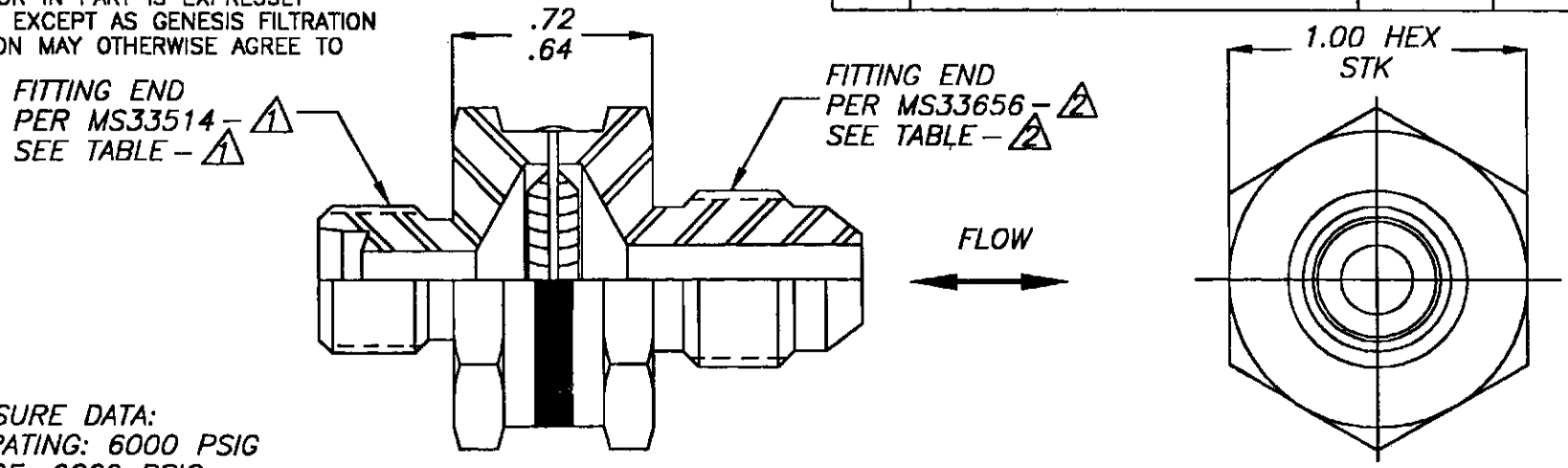

9. PRESSURE DATA:
   OPERATING: 6000 PSIG
   PROOF: 9000 PSIG
   BURST: 13,500 PSIG
8. ELEMENT COLLAPSE PRESSURE: 50 PSID MIN
7. MATERIALS: AISI TYPE 300 SER. CRES.
6. EFFECTIVE FILTER AREA: 3.3 SQ. IN MIN.
5. CONSTRUCTION: TIG WELDED
4. FILTER MEDIA: STAINLESS STEEL WOVEN WIRE MESH.

3. SECOND DASH NUMBER SPECIFIES NOM. MICRON RATING.

2. SECOND DASH NUMBER SPECIFIES FITTING END SIZE.

1. FIRST DASH NUMBER SPECIFIES FITTING END SIZE.

– 1 TUBE NO	TUBE O.D
–4	1/4
–5	5/16
–6	3/8
–8	1/2

– 2 TUBE NO	TUBE O.D
–4	1/4
–5	5/16
–6	3/8
–8	1/2

– 3 NOM MIC RATING
– 2
– 5
– 10
– 20
– 40
– 70
–105

CALL FOR ADDITIONAL SIZES AND OPTIONS AVAILABLE.

UNLESS OTHERWISE SPECIFIED	DO NOT SCALE THIS DWG. INTERPRET DWG PER IAW DOD–STD–1000 DIMS & TOLS. PER ANSI Y14.5	DFT BY:		Genesis Filtration Inc. 9757 7th STREET, UNIT 804 Rancho Cucamonga, CA 91730
DIMENSIONS IN INCHES REMOVE ALL BURRS		DESIGN BY:		
		APPVD BY:		TITLE FILTER ASSY: MINILINE FLARELESS / 37° ASSY
MACHINE RADII .005/.015 R.	SURFACE ROUGHNESS PER ANSI B46.1 100 √	CUSTOMER NAME		
BREAK ALL SHARP EDGES .002/.010 R.				SIZE A / FSCM NO. 04AX3 / DWG NO. 10400–1–2–3 / REV
DECIMALS .XX .XXX / FRAC / ANGLES	MATERIAL NOTED	CUSTOMER P/N		
±.01 ±.005 / ±1/64 / ± 1°	FINISH			SCALE / WEIGHT / SHEET OF